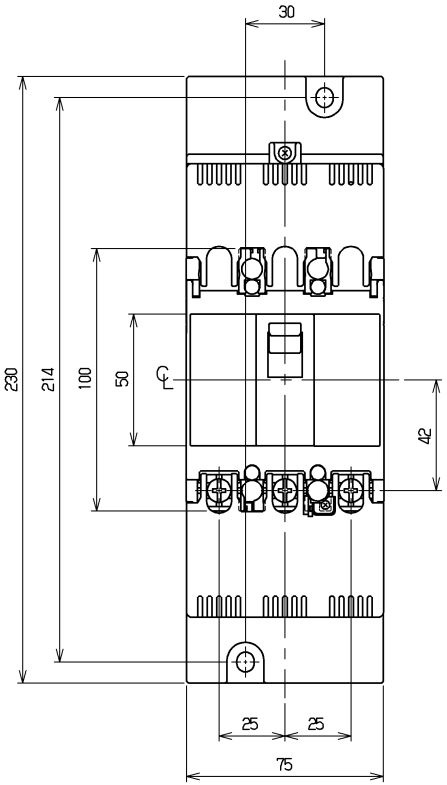

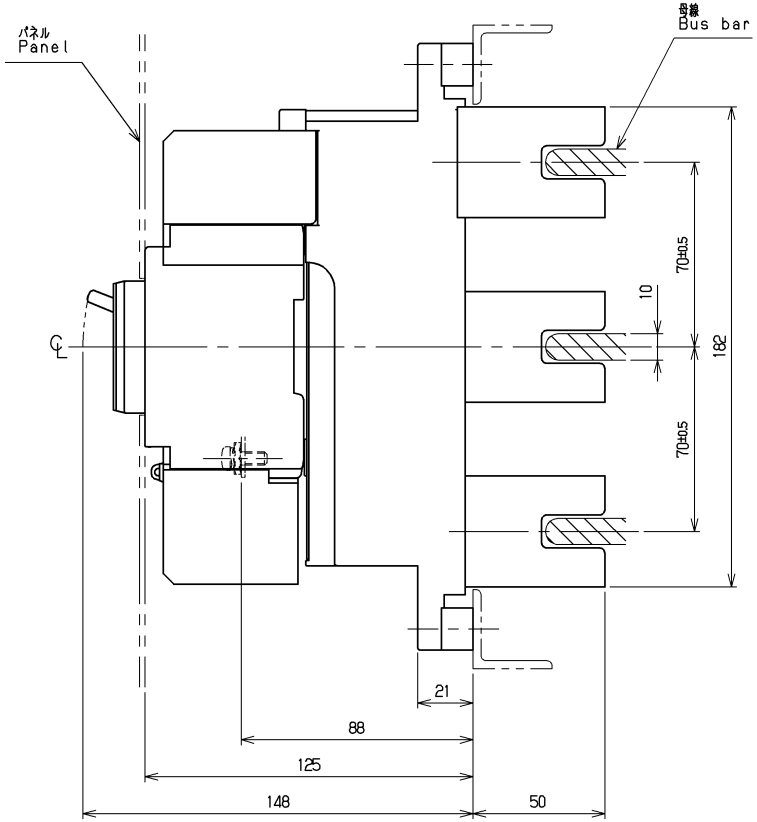

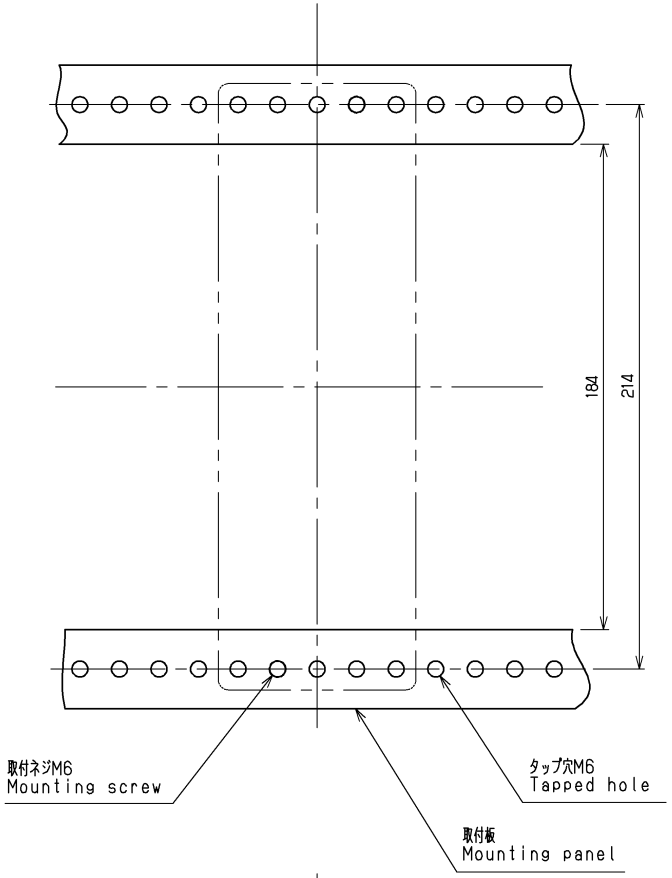

注記
1) 適合するブスバーの仕様については、製品仕様書「F509 18 15 (5)」による
Note
1) The detailed specifications of the busbar are based on the product specifications. [F509 18 15 (5)]

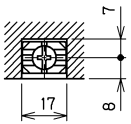

端子部詳細
Terminal section

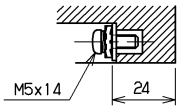

亀の甲ねじ
Self-lifting screw

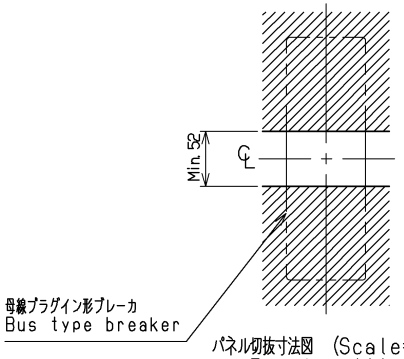

パネル切抜寸法図 (Scale=1:5)
Panel cutting

Dimension:mm

This material and the information herein is the property of Fuji Electric FA Components & Systems Co., Ltd. They shall be neither reproduced, copied, or disclosed to a third party nor used for any other purposes without the express written consent of Fuji Electric FA Components & Systems Co., Ltd.

	DATE	NAME	APPROVED	SCALE
DRAWN	2020-09-18	早川	岡崎	1 : 2
CHECKED		江村		

REVISIONS

Ref.

Fuji Electric FA Components & Systems Co., Ltd.

TITLE

母線プラグイン形ブレーカ外形図

OUTLINE DRAWING FOR PLUG-IN MOUNTING BASE DIRECTLY CONNECTED TO BUS TYPE BREAKER

BW50RAGU-3P T7
EW50RAGU-3P T7

DWG. CODE: Digital Drawings 電子化図面

DRAWING NO.: F509 04 07 (4)

FI-3E